RHH

PGM# LAR-11888

NECAP

NASA'S ENERGY-COST ANALYSIS PROGRAM

PROGRAM SUMMARY

COSMIC

COMPUTER SOFTWARE MANAGEMENT AND INFORMATION CENTER
112 Barrow Hall, University of Georgia, Athens, Georgia, 30602

COSMIC UNIVERSITY OF GEORGIA
Computer Software Management and Information Center

December 11, 1975

Mr. Bob Henninger
Gard Incorporated
7449 Natchez Avenue
Niles, IL 60648

Dear Mr. Henninger:

This letter is to announce the availability of NASA's Energy-Cost Analysis Program (NECAP) from the Computer Software Management and Information Center (COSMIC). A program summary for NECAP, LAR-11888, has been enclosed. The summary provides an abstract for an overall view of the program and a breakdown of the system into its various subsystems with a general description of each one. Also, in a third section, additional programs available from COSMIC in the general field of energy have been included for your information.

For a more detailed description of a program, you may wish initially to purchase only the documentation. The documentation typically does not include a program listing; however, a listing is included with the order of a source program by request.

An order form has been enclosed for your convenience should you wish to order a source program and/or documentation. If you are required to submit a purchase order, this should be issued to Information Services, COSMIC, and should list the program number, title, and amount for items ordered. Please also specify on a purchase order if you wish the source program, the documentation, or both.

If I can be of further assistance, please contact me.

Sincerely,

Ron English

R. E. (Ron) English
Customer Services

mss

Enclosure

SUITE 112, BARROW HALL, ATHENS, GEORGIA 30602, (404) 542-3265

COSMIC

UNIVERSITY OF GEORGIA

Computer Software Management and Information Center

ORDER FORM

Purchase Order Number _____ Customer ID Number _____
(previous customers only)

I wish to purchase the following items [1]

Package ID Number	Order Type	Source Form [2]			Source [3]	Price [4]
		Punched Cards	Trk Size	Density	Listing	
(from abstract, e.g., GSC-11512)	*(Enter pgm doc or both)*	*(Check ( ) for card source)*	*(Enter 7 or 9)*	*(Enter 556, 800, or 1600)*	*(Pgm orders only, Check ( ) if desired)*	*(Enter totaled pgm and doc price if both ordered)*

Special Instructions

TOTAL _____

SHIP TO _____
(Name)
_____
(Company)
_____
(Address)
_____
(City)
_____
(State) (Zip Code)

BILL TO _____
(Name)
_____
(Company)
_____
(Address)
_____
(City)
_____
(State) (Zip Code)

Ordered By _____
(Signature)

1. Programs and/or documents disseminated by the University of Georgia Computer Center are done so under contract to the National Aeronautics and Space Administration or under the distribution rights assigned by the author(s). The University of Georgia, acting for itself, the Regents of the University System of Georgia, the State of Georgia, or the National Aeronautics and Space Administration, assumes no liability for the contents or use thereof, and makes no warranty that such use shall be free of privately owned rights. Moreover, all sales will be considered final unless otherwise adjudged by COSMIC.

2. For a limited number of programs the distribution source media requested on the order form cannot be furnished because of copy restrictions dictated by the original source form received by COSMIC. Programs ordered as punched cards which are not restricted to this distribution media by COSMIC will have an additional $25.00 per each 2,000 cards over 6,000 added to their sale price.

3. Source listings are provided at no extra charge when requested for programs containing fewer than 14,000 instructions if the original media received by COSMIC was Hollerith coded card image (excepting UNIVAC 1100 Series Furpur Symbolic Element File Formatted Tapes).

4. COSMIC reserves the right to effect price changes without notice. Purchase orders, money orders, and checks should be made payable to COSMIC.

SUITE 112, BARROW HALL, ATHENS, GEORGIA 30602, (404) 542-3265

NECAP

NASA'S ENERGY COST ANALYSIS PROGRAM

ABSTRACT

NECAP is a sophisticated computer system used to determine and minimize building energy consumption. The program complies with the ASHRAE state-of-the-art techniques for performing heating and cooling load calculations and energy usage predictions. Capabilities include calculating the thermodynamic heat gains and losses of a structure while taking into account the building's thermal storage capacity as well as variations in hourly weather data. Infiltration is allowed to vary with wind velocity, and internal temperatures are allowed to vary when equipment capacity is scheduled or does not meet loads. Standard wall constructions and schedules are available by default to simplify program input. Users of NECAP can obtain data for selection of the most economical system, system size, fuels, window area, thermal barriers, etc., during the design phase of a building. After installation, users can optimize operating schedules, determine the most economical temperature settings for components, and other useful data. Note that users carrying out hourly thermal load calculations will require hourly values of local weather data which is not distributed with NECAP but can be obtained in punched card or magnetic tape form from the National Climatic Center, Asheville, North Carolina, 28801, Telephone (704) 258-2850, EXT. 0203.

NECAP consists of six separate programs written in CDC FORTRAN, Version 2.3 and has been implemented in batch mode on a CDC 6600 computer. An octal field length of 230K and CPU time of 1300 seconds are typical for the thermal load analysis component of the system with memory and time requirements for the other programs substantially smaller.

LANGUAGE: CDC FORTRAN IV

MACHINE REQUIREMENTS: CDC 6000/CYBER 70 Series

PROGRAM SIZE: Approximately 16,684 statements

PROGRAM NUMBER: LAR-11888

DOCUMENTATION PRICE: $46.50 PROGRAM PRICE: $970.00

TABLE OF CONTENTS

1

GENERAL INFORMATION

Utilizing all of the latest ASHRAE state-of-the-art techniques for performing thermal load calculations and energy usage predictions, NECAP provides the user with a highly sophisticated and versatile building design and energy analysis tool. The program includes such features as taking account of a building's thermal storage and hourly weather data, using new weighting factors for building lights and environmental equipment schedules, allowing infiltration to vary with wind velocity, and allowing interal temperature to vary with equipment capacity schedules. For user convenience, the program has built-in input for certain standard analyses.

NECAP provides users with data for selection of the most economical system, system size, fuels, window area, thermal barriers, etc., during the design phase. After installation, users can optimize operating schedules, determine the most economical temperature settings for components, and obtain other valuable information.

NECAP is actually a set of six individual programs; however, each building design or analysis problem does not necessarily require use of all six programs. A brief description of the component programs comprising NECAP is given here with a more detailed discussion in the following section.

RESPONSE FACTOR PROGRAM

For wall or roof structures different from the typical ones built into NECAP, the Response Factor Program, using a layer-by-layer description of the surface, will calculate and output the set of response factors required to perform transient heat transfer analysis.

DATA VERIFICATION PROGRAM

The Data Verification Program interrogates the building description input data to check for proper order, range, and format of the card input data.

THERMAL LOAD ANALYSIS PROGRAM

Performs hourly transient heat transfer calculations for each building space utilizing actual hourly recorded weather, geometry and construction of the building, scheduled internal loads, and astronomy of the sun.

VARIABLE TEMPERATURE PROGRAM

Corrects the thermal loads, calculated above to account for temperature swings occurring within each space due to thermostat action, equipment capacity, and equipment scheduling.

SYSTEM AND EQUIPMENT SIMULATION PROGRAM

For a specified type of distribution system allocation and type of energy conversion equipment, the Simulation Program determines the total load on each distribution system, transfers it to the energy conversion equipment, and based upon part load efficiencies determines the building's monthly demand and consumption of all forms of fuels and energy.

OWNING AND OPERATING COST PROGRAM

For the expected life of the building, the Owning and Operating Cost Program calculates the expected annual expenditure to own and operate the building utility systems.

A possible sequential use of these six programs is illustrated in Figure 1.1.

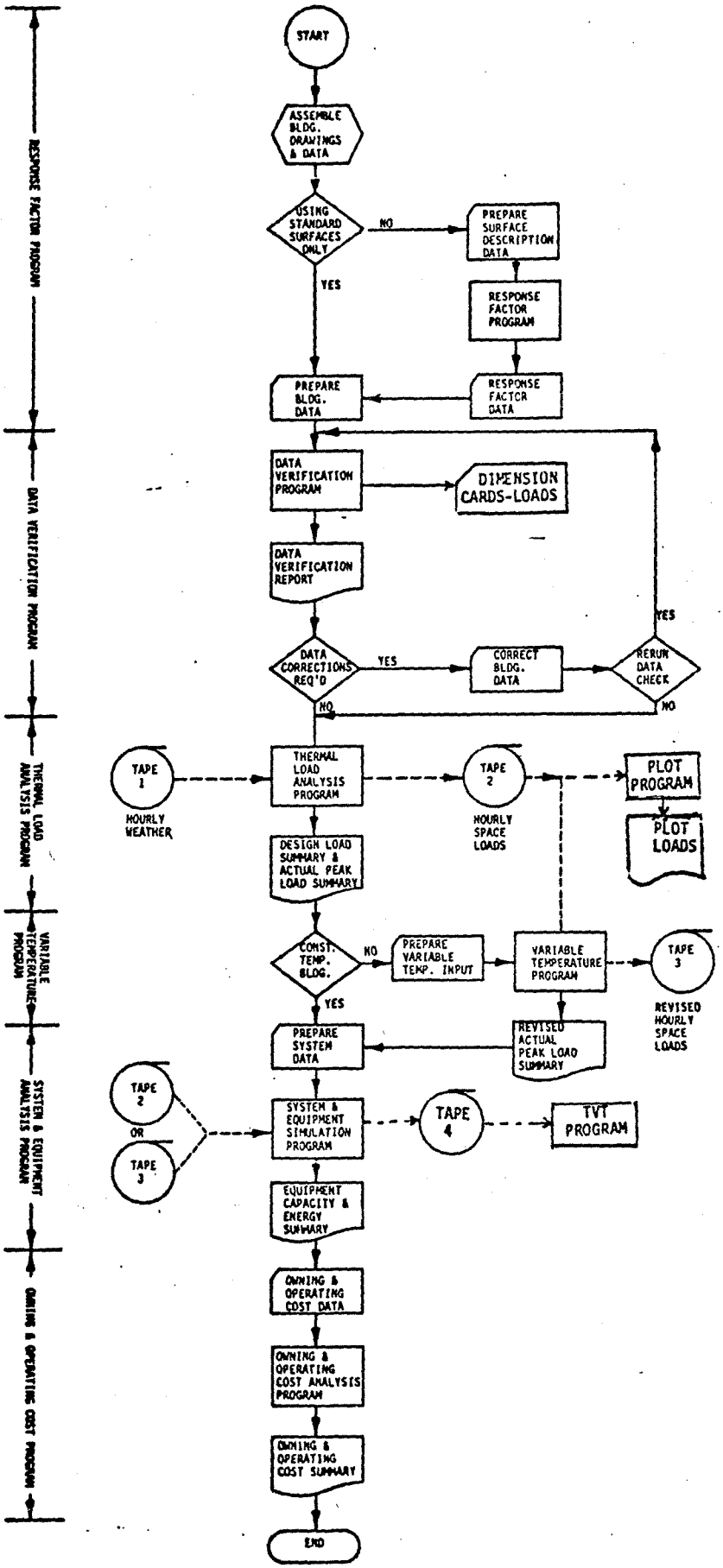

Figure 1.1 NECAP FLOWCHART

2

NECAP SUBSYSTEMS

I. RESPONSE FACTOR PROGRAM

The Response Factor Program generates the set of heat transfer factors called response factors required to accurately determine the transient flow of heat into, through and out of building exterior walls and roofs as they react to temperature differences across them. These response factors are a function of the type of materials used and their order of placement and therefore require that the following be known for each layer:

(1) thickness, ft.
(2) thermal conductivity BTU/(hr.) (ft.) (°F)
(3) density 16/cu. ft.
(4) specific heat, BTU/(lb.) (°F)
(5) resistivity (hr.) (sq. ft.) (°F)/BTU

Using this data, the Response Factor Program calculates the set of response factors peculiar to the wall or roof construction in question and then outputs this data onto punched cards for direct insertion into the Thermal Load Program input data deck. The Response Factor Program need not be used if all wall and roof types desired are among the standard walls and roofs built into the Thermal Load Analysis Program and available for use simply by calling an input code.

Calculation of the response factors involves a matrix-type solution of the LaPlace transform of the heat conduction equation and inversion integral using the residue theorem, details of which can be found in:

"Conduction of Heat in Solids", H. S. Carslaw and J. C. Faeger, Second Edition, p. 326.

"Fortran IV Program to Calculate Heat Flux Response Factors for a Multi-layer Slap", G. P. Mitalas and J. G. Arseneault, NRC, June, 1967.

"Thermal Response Factors for Multi-layer Structures of Various Heat Conduction Systems", T. Kusuda, ASHRAE, January, 1969.

II. DATA VERIFICATION PROGRAM

The Data Verification Program checks the complete input deck required for the Thermal Load Analysis Program. As a card is read, each data field is checked for:

(1) correct sequence
(2) proper range
(3) insufficient or extraneous data
(4) misplaced data
(5) proper format

As errors are discovered, they are indicated on the output report immediately following the card image listing of the data card.

Three types of errors are signaled by the Data Verification Program. Warnings are errors that are not likely to cause an unsuccessful run, but which may cause incorrect results. Severe Errors result when the data is out of bounds. They may or may not cause incorrect results. This type error tends to propagate through the program and cause unrealistic results. Terminal Errors stop the Thermal Load Analysis Program immediately and can be caused by alpha characters in a numeric field, special characters in a numeric field, trailing or embedded blands in a numeric field, etc.

III. THERMAL LOAD ANALYSIS PROGRAM

The Thermal Load Analysis Program, a complex of heat transfer, psychrometric, and geometric subroutines, computes the thermal loads, both heating and cooling, resulting in each building space each hour due to:

1. Transmission gains and losses through walls, roofs, floors, and windows.
2. Solar gains through windows.
3. Internal gains from people, lights, and building equipment.
4. Infiltration gains and losses due to wind and thermal pressure differences across openings.
5. Ventilation air gains and losses due to fresh air requirements.

Using these capabilities, the Thermal Load Analysis Program can perform two types of analysis:

1. Design Load Analysis - Utilizing user-defined design weather data, a 24-hour design day analysis is done for each month to determine peak heating and cooling requirements for each space and the entire building.
2. Hourly Energy Analysis - Utilizing actual hourly weather data, hourly heating and cooling loads for each space are calcualted for an entire year of building operation and results stored on magnetic tape for use by other programs.

The input to the Thermal Load Analysis Program reflects building architecture, building construction, building surroundings, local weather, and pertinent astronomy of the sun. The output consists of hourly weather and psychrometric data and hourly sensible loads, latent loads, return air lighting loads, and equipment and lighting power consumption for each building space. All calcula-

tions are performed in accordance with algorithms set forth by ASHRAE in their publication entitled "Procedures for Determining Heating and Cooling Loads for Computerized Energy Calculations".

If the option to carry out an hourly energy analysis is selected, hourly values of certain weather data local to the relevant geographical area are required. This data is not distributed with the NECAP program by COSMIC but can be obtained on magnetic tape from the National Climatic Center, Asheville, North Carolina, 28801. When an order is given for a selected tape, i.e., a selected weather station in proximity to the city in which the building is located, the user should obtain ten years of weather data to insure all types of weather years will be available for analysis.

IV. VARIABLE TEMPERATURE PROGRAM

The space loads calculated by the Thermal Load Analysis Program are calculated assuming that space heating and/or cooling is available any time it is required and that space temperature is always maintained at its specific setpoint.

However, in reality space temperature is not maintained at a constant, but varies from its setpoint due to throttling range and deadband of thermostat, undersized space heating and/or cooling capacity, and shutdown of equipment during specific periods.

Utilizing such information as the type of thermostat, operating characeristics of thermostats, heating and cooling capacity available to each space, and seasonal start-up/shutdown dates for the heating and cooling plant, the Variable Temperature Program

corrects (for these effects) the basic loads calculated by the Thermal Load Analysis Program and generates a new output tape containing hourly space loads.

Input to the Variable Temperature Program consists of the output tape generated by the Thermal Load Analysis Program and some additional user defined information such as the types of floors, ceilings, and furnishings that are a part of each space. Two approaches are available to the user. The more detailed solution requires that the make-up of the floors, ceilings, and furnishings be known and use be made of the Response Factor Program to generate corresponding response factors. The alternative approach is to make use of the typical default values built into the program.

Output consists of a one page report summarizing the results of the variable temperature analysis. Optional reports are available which echo input data and detail results for various phases of the analysis.

V. SYSTEM AND EQUIPMENT SIMULATION PROGRAM

Due to outside air requirements and the limitations imposed by various component control schedules, the hourly heating and cooling requirements of a building's boilers and chillers may differ markedly from the summation of hourly heating and cooling space loads. The System and Equipment Simulation Program, therefore, performs two functions. First, it translates hourly space loads, including the ventilation air requirements, by means of

the individual performance characteristics of each fan system, into the hourly thermal requirements imposed upon the heating and cooling plants. Second, it converts these hourly thermal requirements into energy requirements based upon the partload characteristics of the heating and cooling plant equipment.

The System and Equipment Simulation Program is made up of a number of functions and subroutines. The main routine, SYSIM, directs the flow of logic through the program and controls the order in which calculations are to be performed. The sequence of the calculations is as follows. First, the zone air flows are determined using the peak hourly heating and cooling zone loads. Next, fans and fan motors are sized based on air flows and system pressures. In this segment, central equipment is also sized. Then, an hour-by-hour analysis of the building's energy distribution systems is performed. Each system is examined each hour and the hourly heating and/or cooling loads calculated and summed to give the building's heating and/or cooling requirements. At the end of an hour's calculations, after the last thermal distribution system has been examined and any snow-melting load accounted for, the EQUIP subroutine is called upon to convert the hourly building thermal requirements into hourly heating, cooling and on-site generation (if applicable) energy requirements. This series of calculations is repeated hourly for the length of time called for (up to 1 year). The output is organized in terms of monthly energy and resource requirements for the building equipment combination in question. An annual summary of the energy and resource consumption is then printed out as a permanent record.

The sequence of calculations outlined above is the same for a heat conservation equipment combination, except that: 1) zone air flows are sized differently, 2) other supplemental heating requirements must be accounted for, and 3) specialized treatment of the double-bundled condenser refrigeration machines is necessary.

Regarding the program structure, storage requirement savings are realized by the renumbering of zones internally by the computer, since variables which were once doubly subscripted may now be singly subscripted. Also, user flexibility is increased since he need not be concerned with zone sequence when assigning zones to energy distribution systems.

Input to the Systems and Equipment Simulation Program consists of the output tape generated by the Thermal Load Analysis Program or the Variable Temperature Program plus user supplied data describing the distribution system(s). Output consists of eight reports:

1. Recap of Card Input Data
2. Title Page
3. Summary of Energy Distribution System Characteristics
4. Summary of Zone Air Flows
5. Summary of Hourly Calculations (Optional)
6. Summary of Loads Not Met
7. Summary of Equipment Capabilities
8. Monthly and Annual Energy Summary

VI. OWNING AND OPERATING COST ANALYSIS PROGRAM

The Owning and Operating Cost Analysis Program performs a life cycle cost analysis for each building heating and cooling

system analyzed by the Systems and Equipment Simulation Program. Life cycle costs are those expenditures which occur singularly or periodically over the life of the building and include cost of energy, cost of equipment in terms of first costs and replacement costs which occur if the expected life of the equipment is less than that of the building, cost of maintenance and periodic overhaul (material and labor), salvage value of equipment, and opportunity costs for floor space occupied by the equipment.

Input is user supplied cost data related to the system and equipment. Output for each set of input data consists of annuities, calculated using present value techniques, for each equipment category and for the total heating, ventilating and air conditioning (HVAC) system.

Additionally, two plot programs provide the user with printed plots of hourly thermal loads for the building by space, or by building total and the characteristic relationship between system and ambient temperatures. Both programs utilize the line printer and require no special plotting hardware.

3

ADDITIONAL COSMIC PROGRAMS

Brief descriptions of other selected NASA developed computer programs available through COSMIC which deal with energy or power system applications are presented here. Readers interested in a bibliography of energy related topics are referred to the publications, Energy: A Special Bibliography with Indexes (NASA SP-7042) and the quarterly publication Energy: A Continuing Bibliography with Indexes (NASA SP-7043). These publications are not distributed by COSMIC but details on their availability may be obtained from the:

Scientific & Technical Information
Office
National Aeronautics & Space
Administration
Washington, D. C. 20546

COSMIC PROGRAM ABSTRACT

12/27/74

Distribution Feeder Analysis Program
(Ontario Hydro, Ltd.)

This program computes nodal voltages, losses and line currents for radial primary distribution feeders. Maximum and minimum fault currents at each node for a detta-wye grounded connection of the distributing station transformer are calculated. If computed voltages are outside prescribed limits, voltage corrective devices, capacitors and regulators, are added in accordance with a predetermined set of rules and the voltage profile is recalculated after each addition. Capacitors may also be added to minimize peak and energy losses on the feeder.

LANGUAGE: FORTRAN V

MACHINE REQUIREMENTS: UNIVAC 1108, Exec 8

NUMBER OF CARDS: Approximately 8,050

PROGRAM NUMBER: COS-02420

DOCUMENTATION PRICE: $12.00 PROGRAM PRICE: $1,380.00

COSMIC PROGRAM ABSTRACT

Computer Program Analyzes And Monitors Electrical Power Systems (POSIMO)
(German Satellite Program)

The power system is considered to be a group of both power consuming or power donating power elements. Each element may be either a passive load or a load which may serve as a source for subsequent connected loads. The numerous combinations in which such a set of power elements can interact to form a particular power system can be expressed in terms of kind and number of serial and parallel interconnections between these elements, while the various power flow configurations in any such power system are determined on the one side of the 2^N combinations of the N status indicators and on the order side by the power dependant response of the sources involved.

The analysis of the power element combinations to a particular power system is performed by program POSIMO PREParation while the calculation of the different power flow configurations and their inherant power balance and charge budget response is done by POSIMO EXECution.

POSIMO PREP will generate the required data set for POSIMO EXEC from three different sources of input: 1. a load - source - assignment list, 2. a load - status - assignment list and 3. a set of coordinates denoting the efficiency vs. power response of the different sources.

The outstanding feature of the approach lies in the simplicity of the lists to be entered, inasmuch as any list item refers to only one separate power element disregarding its connections and impacts on any of the remaining elements of the system. The first list simply states how much power from which response to which of the power elements is received or submitted. The second list is simply represented by the Boolean expressions of status indicators for each power element. Both the sequence of element names appearing in the two lists and the status indicators in the Boolean expressions may be written in random order.

Usually one parameter (the nominal power) will be sufficient to describe the power property of a single power element. For increased flexibility; however, POSIMO is prepared to take up to 3 power parameters along with one parameter processing designator. If more than one parameter shall be employed, the user can easily insert his own processing routines.

Basically, POSIMO can handle power systems of any extent and configuration if they can be described by the three input sources as mentioned above. Limits due to reasonable array dimensions have been introduced into POSIMO for power systems considered to be sufficiently extensive and comprising up to 200 elements, 50 of which may be both loads and sources and up to 10 sources in series. The power systems may be controlled by up to 100 status indicators which may be combined in Boolean expressions with up to 8 ANDs and 8 ORs.

LANGUAGE: FORTRAN IV

MACHINE REQUIREMENTS: IBM-360

NUMBER OF CARDS: Approximately 1,131

PROGRAM NUMBER: GSC-11505

DOCUMENTATION PRICE: $11.00

PROGRAM PRICE: $560.00

COSMIC PROGRAM ABSTRACT

05/13/75

MULTIWICK: A Computer Program That Numerically Integrates the Differential Equations That Describe the Hydrodynamics of a Large Class of Heat Pipes
(TRW Systems Group)

MULTIWICK is a computer program to numerically integrate differential equations that describe the hydrodynamics of high performance heat pipes that have multiple flow paths for condensate to return to the evaporator regions. The program MULTIWICK is applicable to the following types of flow paths:

Wick- a single piece of porous material that runs the length of the heat pipe. It is usually either a layer that lines the inner wall of the heat pipe or a diametral slab.

Arteries- porous-walled conduits that run the length of the heat pipe and are closed at the evaporator end. Primed arteries provide low flow resistance and a high capillary pressure.

Excess-Liquid Reservoirs- axial channels that primarily provide excess-liquid control in zero-gravity operation (excess liquid resides in the reservoirs rather than in a vapor-space slug). An excess-liquid reservoir can be either a porous-walled open-ended tube, or a channel formed by a tube in close proximity to the intersection of a wick and the heat-pipe wall. Unlike arteries, reservoirs usually do not remain filled their entire length.

Fillets- liquid that forms in corners due to surface tension. The fillet size at a given point along its length is automatically set by the vapor-liquid pressure difference at that point.

Bilge- liquid that lies in the bottom of a heat pipe operating in a gravitational field.

Circumferential Grooves- distribute liquid under the action of surface tension across the inner surface of the heat-pipe wall.

Vapor Spaces- provide flow paths for vapor to return to the condenser sections.

MULTIWICK has five operational modes that provide the user flexibility in answering crucial heat-pipe design questions.

In the preliminary analysis of a new heat pipe, the designer uses one operational mode (Mode No. 1) to find the optimum amount of working fluid and the corresponding maximum heat-transfer rate for a specific condition. (The optimum amount of working fluid is defined as that amount that provides the greatest heat-transfer rate without resulting in a liquid slug in a vapor space).

Once the amount of working fluid has been determined, the user can then find the maximum heat-transfer rate at any other operating condition for that amount of fluid (Mode No. 4)

In Mode No. 2, the user specifies both the amount of working fluid and a heat-transfer rate. MULTIWICK then calculates the liquid distribution and the variation of the vapor-liquid pressure difference in the heat pipe. Such a calculation is useful, for example, to find the length of liquid slugs in vapor spaces that can result from liquid expansion at higher operating temperatures.

In the case of an arterial heat pipe, MULTIWICK has two additional operational modes that calculate the maximum heat-transfer rate under which arteries will prime. One is for an optimum amount of fluid for priming (Mode No. 3); the other is for a specified amount (Mode No. 5).

The MULTIWICK user specifies the heat input and rejection distribution. The heat pipe is divided into sections and the fraction of the total heat throughout is specified for each section, then the program is not limited to heat pipes with only one evaporator, one adiabetic and one condenser section.

The MULTIWICK program incorporates a mathematical model of flow through fibrous wicks that includes the effect of:

Meniscus recession-the reduction of the flow area with increasing vapor-liquid pressure difference due to the menisci at the wick's surface attaining a higher curvature.

Partial saturation- the emptying of the progressively smaller pores of the wick as the vapor-liquid pressure difference approaches the critical value where the wick fails.

Hysteresis- the relationship between the level of saturation of the wick and the vapor-liquid pressure difference depends on whether the pressure difference has been increasing or decreasing. The MULTIWICK user, therefore, specifies whether the heat pipe starts from a state where the wick is initially saturated or, as in the case after a burn-out, from a state where the wick in the evaporator region has dried out.

The user may also elect a simple model of fully saturated wick operation that does not include the above effects.

LANGUAGE: FORTRAN IV

MACHINE REQUIREMENTS: CDC 6000 Series

PROGRAM SIZE: Approximately 2,381 Source Statements

PROGRAM NUMBER: GSC-12009

DOCUMENTATION PRICE: $12.50 PROGRAM PRICE: $710.00

COSMIC PROGRAM ABSTRACT

Updated 11/29/74

Transformer Optimization Computer Program
(Electro-Optical Systems, Inc.)

A computer program has been developed for performing transformer optimization. In using this program, values of flux density, frequency, primary and secondary voltage and current, materials constants, and input volts per turn ratio must be known or assumed. Given these parameters, the program computes:

1. primary and secondary turns, resistance, length of windings and losses;
2. core size, volume, weight and losses;
3. voltage regulation; and
4. overall transformer efficiency.

The output tabulation consists of the computed results versus volts per turn ratio.

Since frequency and flux density are not included in the transformer optimization routine, the program is not complete. In its present condition, it would make a good subroutine in a more general transformer optimization program.

LANGUAGE: FORTRAN IV

MACHINE REQUIREMENTS: IBM-7094

NUMBER OF CARDS: Approximately 223

PROGRAM NUMBER: LEW-10299

DOCUMENTATION PRICE: $19.50 PROGRAM PRICE: $140.00

COSMIC PROGRAM ABSTRACT

10/13/72

Computer Program for Afterheat Temperature Distribution for Mobile Nuclear Power Plant
(Westinghouse Electric Corporation)

The ESATA computer program has been developed to analyze the thermal safety aspects of post-impacted mobile nuclear power plants. The program calculates the transient temperature and pressure response for a gas-cooled thermal reactor power plant following impact. The analysis is based on a closed containment vessel system with trapped helium gas where the nuclear afterheat must be dissipated by conduction through the containment wall without exceeding the creep-rupture strength of the containment vessel. In addition to the heat transfer mechanisms of conduction, convection, and radiation, phenomena such as core and shield melting and displacement, fission product release from the reactor core followed by subsequent condensation and re-evaporation, metal-water chemical reactions, and pressure buildup due to increased temperatures and volatile products are simulated.

Flexibility was built into the program to consider variable core, shield, and containment vessel dimensions, variable weight, initial temperatures and several shield options. In addition to the problem described, one option of the program permits solution of problems involving transient or steady state heat transfer in multi-dimensional systems having arbitrary geometric configurations, boundary conditions, initial conditions, and physical properties.

The program can be extended to analyze mobile power plant concepts utilizing reactor concepts such as the liquid metal cooled fast reactor. In addition, the program could be extended to perform meltdown analysis of stationary power plants or analysis of post impacted fuel capsules following re-entry.

LANGUAGE: FORTRAN IV

MACHINE REQUIREMENTS: IBM-7094/7044

NUMBER OF CARDS: Approximately 6,551

PROGRAM NUMBER: LEW-11693

DOCUMENTATION PRICE: $28.50

PROGRAM PRICE: $680.00

COSMIC PROGRAM ABSTRACT

12/27/74

Computer Program for Thermodynamic Analysis of Open-Cycle Multishaft Power System
(Lewis Research Center)

This program computes the specific power output, specific fuel consumption, and cycle efficiency functions of turbine-inlet temperature, compressor pressure ratio, and component performance factors for power systems having any number of shafts up to a maximum of five. On each shaft there can be any number of compressors and turbines up to a maximum of five each, along with any specified number of intervening intercoolers and reheaters. A recuperator can be included in the system and turbine coolant flow can be accounted for. The combustion-gas thermodynamic properties are valid for any fuel consisting of hydrogen and/or carbon only. The program should be used with maximum temperatures no higher than about 2000 K (3140°F) because molecular dissociation is not included in the stoichiometry. Improvements in cycle performance resulting from the use of intercooling, reheating, and recuperation can also be determined.

LANGUAGE: FORTRAN IV

MACHINE REQUIREMENTS: IBM 7094

PROGRAM SIZE: Approximately 730 source statements

PROGRAM NUMBER: LEW-12324

DOCUMENTATION PRICE: $9.50 PROGRAM PRICE: $460.00

COSMIC PROGRAM ABSTRACT

10/16/75

SESOP - Program for Solar Energy Heating Systems Analysis
(Lockheed)

This program deals with energy conservation and contains thirteen subroutines for the analysis of heating, ventilation and air conditioning systems with solar energy utilization for space heating and hot water heating. Operations performed by the program include:

1. Calculation of the hot water demand profiles.
2. Calculation of the space heating and cooling loads.
3. Calculation of the electric demands.
4. Analysis of flat plate non-tracking solar collectors and calculation of the energy collected by the solar collectors.
5. Calculation of the purchased energy requirements (electricity, fuel oil and natural gas) of the heating, ventilation and air conditioning system, as well as, water and electricity utility systems.
6. Comparison of the energy requirements of the conventional systems and the solar energy systems.

Hot water demand profiles are calculated by use of empirical equations with the number of occupants per dwelling unit and the number of dwelling units being the independent variables. The space heating and cooling loads are calculated for each building based on outside environment, desired inside conditions, building construction and geometry, domestic power usage, occupancy rate and occupant metabolic rate. Upon completion of calculation of the loads for each of the buildings, the loads are summed to determine the requirements of the central utility systems. Based upon input descriptions of the environment and the solar collectors, an analysis is performed to determine a profile of the amount of useful energy which can be collected by the solar collectors. The program uses the load profiles and solar energy profiles to determine the energy required by alternative systems to meet the utility demands.

Much of the logic used in SESOP was adapted from the Energy Systems Optimization Program (ESOP). SESOP operates in batch or interactive mode.

LANGUAGE: FORTRAN

MACHINE REQUIREMENTS: UNIVAC 1100, Series Exec 8

PROGRAM SIZE: Approximately 2,296 source statements

DISTRIBUTION MEDIA: 7 Track UNIVAC FURPUR Formatted Tape

PROGRAM NUMBER: MSC-14853

DOCUMENTATION PRICE: $10.50 PROGRAM PRICE: $530.00

COSMIC PROGRAM ABSTRACT

08/27/75

ESOP Version IV - Energy Systems Optimization Program
(Lockheed Electronics, Inc.)

This computer program contains 25 subroutines to calculate the utility loads of a building complex and perform an analysis to evaluate the yearly operational characteristics of a Modular Integrated Utility System (MIUS) designed to meet these loads. Utility loads calculated are:

1) electricity usage
2) space heating and cooling loads
3) hot water demand
4) solid waste disposal
5) potable water treatment
6) waste water treatment

The total yearly energy needed by a MIUS to meet these loads is calculated and compared to that required to satisfy the loads by conventional means.

The principal subroutines perform such functions as calculating operating parameters and daily total energy input requirements as well as by-products and recoverable waste energy. The subroutines analyze two types of utility systems; a diesel/turbine prime mover system, and a steam power plant (boiler) prime mover system. ESOP allows the user to simulate any building complex and any location by inputting a description of each building type within the complex and the appropriate weather data. Loads and energy requirement data are output for each of the four seasons and for the full year.

The program operates in interactive or batch mode and uses the UNIVAC MATH-PACK routines, ORTHLS and FITY.

LANGUAGE: FORTRAN

MACHINE REQUIREMENTS: Approximately 7,360 source statements

DISTRIBUTION MEDIA: **7 Track UNIVAC FURPUR Formatted Tape**

PROGRAM NUMBER: MSC-14854

DOCUMENTATION PRICE: $32.50 PROGRAM PRICE: $790.00

COSMIC PROGRAM ABSTRACT

10/22/74

BPP - Computer Program for Simulation of Nickel-Cadmium Batteries (Jet Propulsion Labs)

The battery performance prediction (BPP) computer program simulates the operation of nickel-cadmium batteries.

The BPP computer program simulates the characteristics of the battery, load, charger and thermal interface. Battery current, voltage and thermal levels are computed. A running account is maintained of the battery state-of-charge, battery and load heat dissipation, and critical voltage and current levels. Tabular and graphical output is produced.

LANGUAGE: FORTRAN V

MACHINE REQUIREMENTS: UNIVAC 1108, Exec-8

PROGRAM SIZE: Approximately 1,777 Source Statements

PROGRAM NUMBER: NPO-13467

DOCUMENTATION PRICE: $8.00 PROGRAM PRICE: $450.00